SAMT

Specialised Air Motors and Transmission

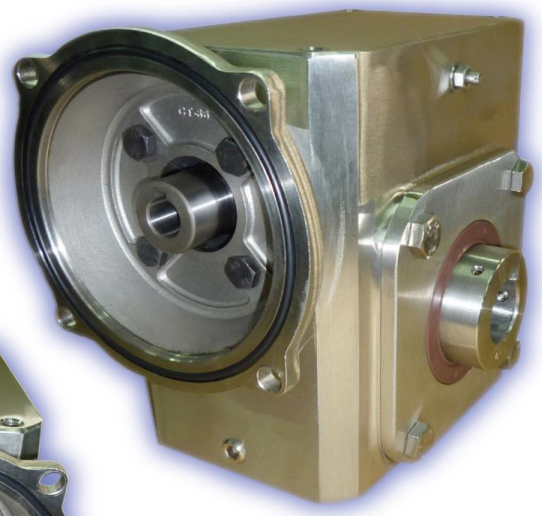

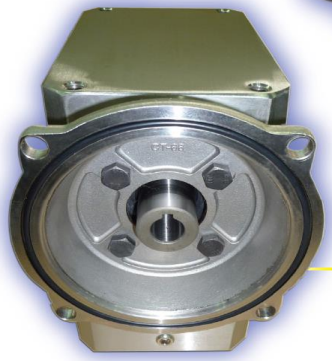

SS SERIES

Stainless steel Worm Gear Speed Reducers

TONSON Australia (SAMT) Pty Ltd
Factory 19, 5 Lyn Parade PRESTONS NSW 2170
Ph: (02) 9607 4100 Fax: (02) 9600 8882

Stainless steel Worm Gear Speed Reducers

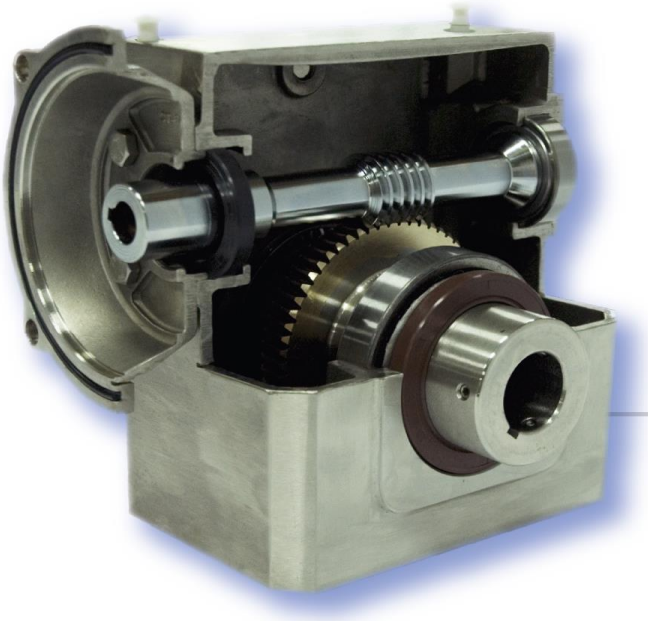

1. Stainless steel material for housing,covers and flange to endure tough environments and elimination rusting and peeling.
2. Polished and smooth surface for reducing germs bred.
3. Stainless steel output shaft resists corrosion from moisture.
4. O-ring on input flange decreases access of fluids.
5. Pressure decrease chamber design for free vent installed.
6. Viton seals offer superior performance in hot/harsh environment.
7. USDA H1 food grade lubricant: MOBIL SHC CIBUS 460.

SS SERIES

Ex : SHM 206 60 56C A

SHM - Stainless flange . Hollow output shaft

SSM - Stainless flange. Solid output shaft

S — H — M

206 - Center distance. 206 / 237 / 262 / 325

60 - Ratio. 5 / 10 / 15 / 20 / 30 / 40 / 50 / 60

56C - NEMA 56C frame

A - Assembly of shaft position.

We offer various gear speed reducers with advanced capabilities which are equivalent to International specifications. Please contact us to get more information.

LOAD CLASSIFICATIONS

Class I Service Factor 1.0

RATIO	Output RPM	Input Horse Power @ 1750 RPM						
		1/4	1/3	1/2	3/4	1	1-1/2	2
5	350	206	206	206	206	206	206	206
10	175	206	206	206	206	206	206	206
15	117	206	206	206	206	206	206	237
20	88	206	206	206	206	206	237	262
30	58	206	206	206	206	237	262	325
40	44	206	206	206	206	237	325	325
50	35	206	206	206	237	262	325	325
60	29	206	206	206	237	262	325	

Class II Service Factor 1.25

RATIO	Output RPM	Input Horse Power @ 1750 RPM						
		1/4	1/3	1/2	3/4	1	1-1/2	2
5	350	206	206	206	206	206	206	206
10	175	206	206	206	206	206	206	237
15	117	206	206	206	206	206	237	262
20	88	206	206	206	206	206	262	325
30	58	206	206	206	206	237	325	325
40	44	206	206	206	237	262	325	
50	35	206	206	206	237	325	325	
60	29	206	206	206	262	325	325	

Class III Service Factor 1.75

RATIO	Output RPM	Input Horse Power @ 1750 RPM						
		1/4	1/3	1/2	3/4	1	1-1/2	2
5	350	206	206	206	206	206	206	237
10	175	206	206	206	206	206	237	262
15	117	206	206	206	206	237	262	325
20	88	206	206	206	237	262	325	325
30	58	206	206	206	237	325	325	
40	44	206	206	237	262	325		
50	35	206	206	237	325	325		
60	29	206	206	237	325	325		

DIMENSIONS

SHM

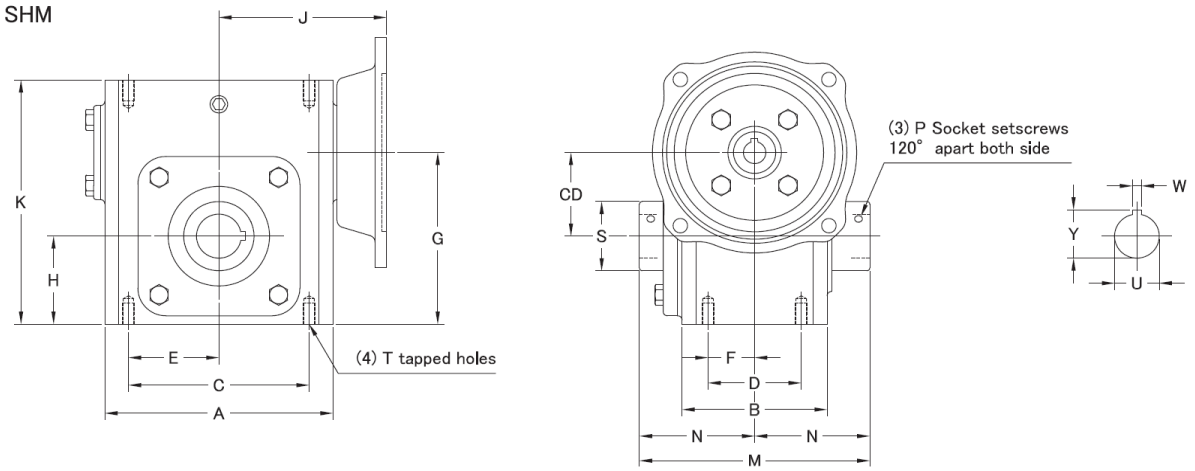

SSM

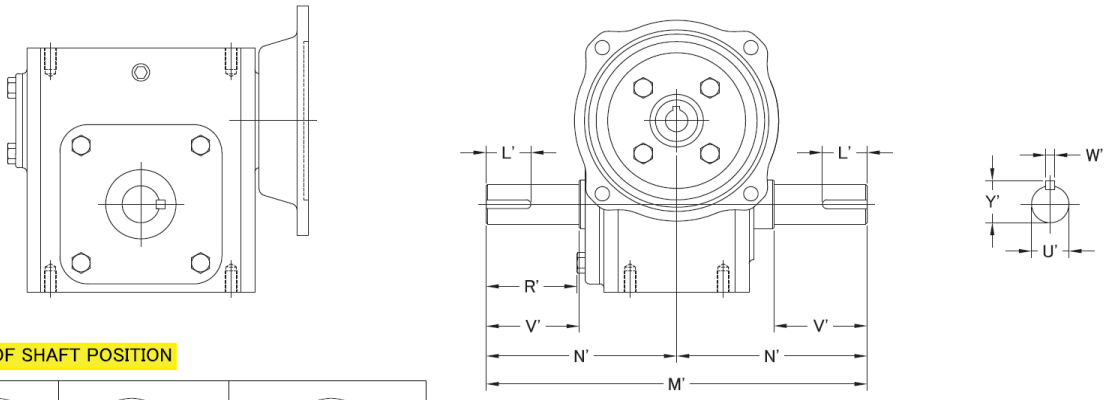

ASSEMBLY OF SHAFT POSITION

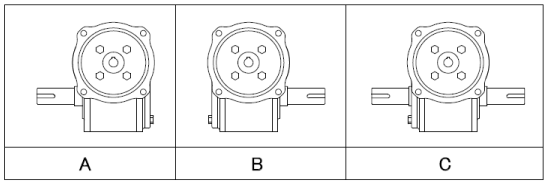

SIZE	Shared											
	A	B	C	CD	D	E	F	G	H	J	K	T
206	5.7	3.82	5	2.062	2.88	2.5	1.44	4.34	2.28	4.37	6.38	3/8-16UNC
237	6.38	4.06	5	2.375	2.88	2.5	1.44	4.88	2.5	4.69	6.94	3/8-16UNC
262	7.17	4.69	6.38	2.625	3.38	3.19	1.69	5.56	2.94	5.06	8	3/8-16UNC
325	9.02	5.75	7.5	3.25	4	3.75	2	6.75	3.5	6.06	9.38	7/16-14UNC

(Unit / inch)

SIZE	Hollow Output Shaft							Solid Output Shaft							
	M	N	P	S	U	W	Y	L'	M'	N'	R'	U'	V'	W'	Y'
206	6.44	3.22	1/4-28UNF	1.77	1.13 1.25	0.25 0.25	1.25 1.38	1.25	9.38	4.69	2.19	1	2.09	0.25	1.11
237	6.44	3.22	1/4-28UNF	1.97	1.25	0.25	1.38	1.25	10.18	5.09	2.31	1.13	2.37	0.25	1.24
262	7	3.5	1/4-28UNF	2.36	1.25 1.44	0.25 0.38	1.38 1.62	2	11.26	5.63	2.56	1.13	2.63	0.25	1.24
325	8.76	4.38	5/16-24UNF	2.76	1.25 1.94	0.25 0.5	1.38 2.13	2.44	14.12	7.06	3.22	1.375	3.25	0.31	1.51