M6-FB

PISTON AIR MOTORS

3/4 HP 4.4 N·m 700 RPM

Air Brake, Flange Mounting

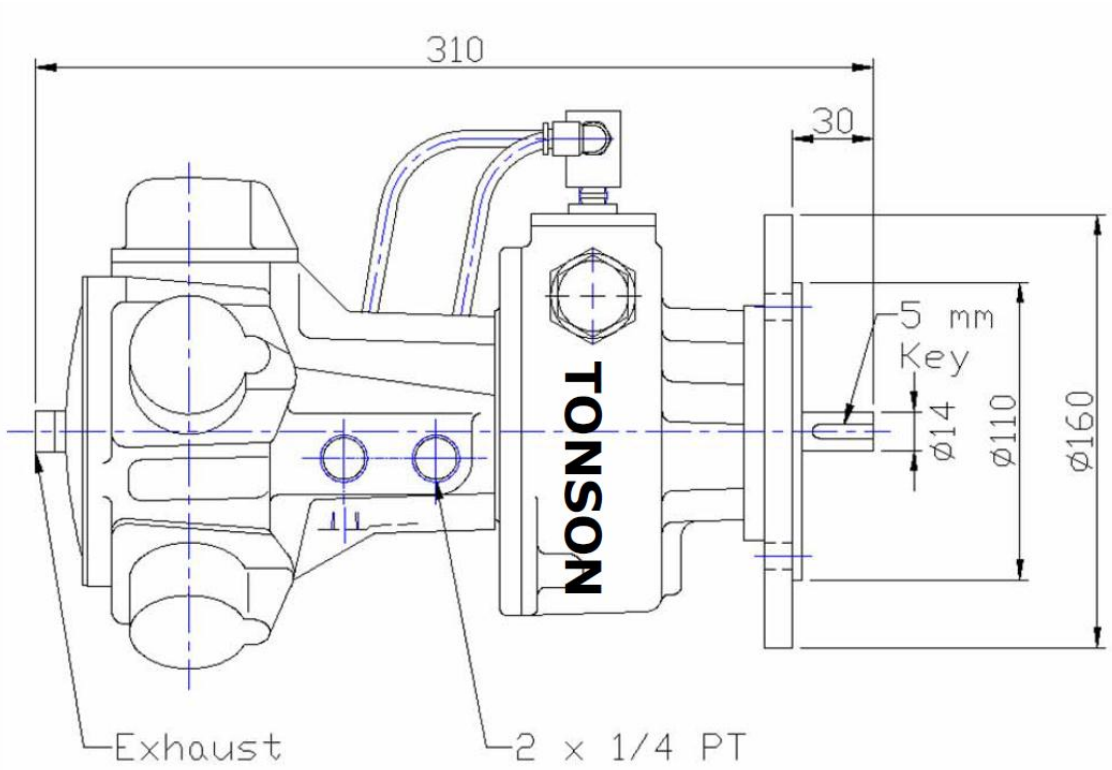

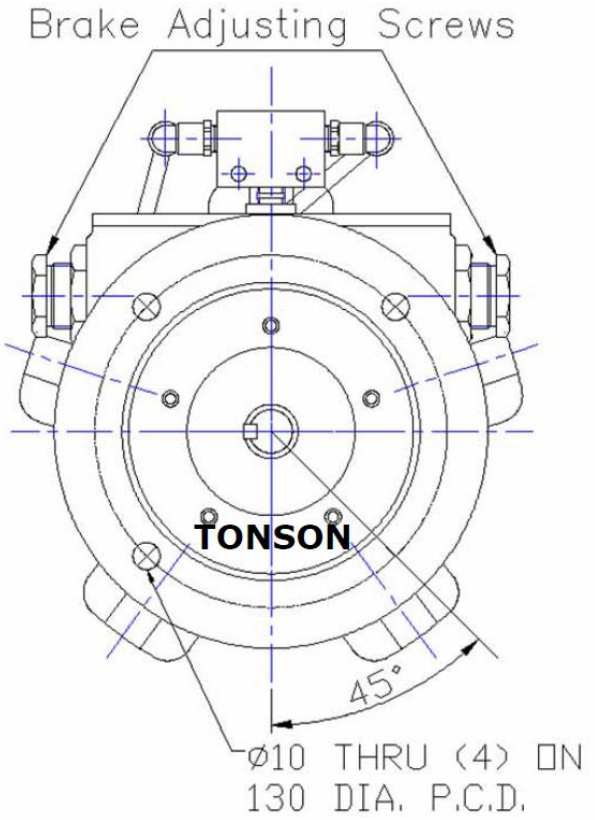

All dimensions in mm

TONSON
SINCE1966 Realizing Clever Conceptions

TONSON Australia Pty Ltd.
Factory 19 / 5 Lyn Parade PRESTONS NSW 2170
PH: 02 9607 4100 FAX: 02 9607 4200
www.tonson-motor.com.au