V2-N

TONSON VANE AIR MOTOR

Nema 56C Mounting

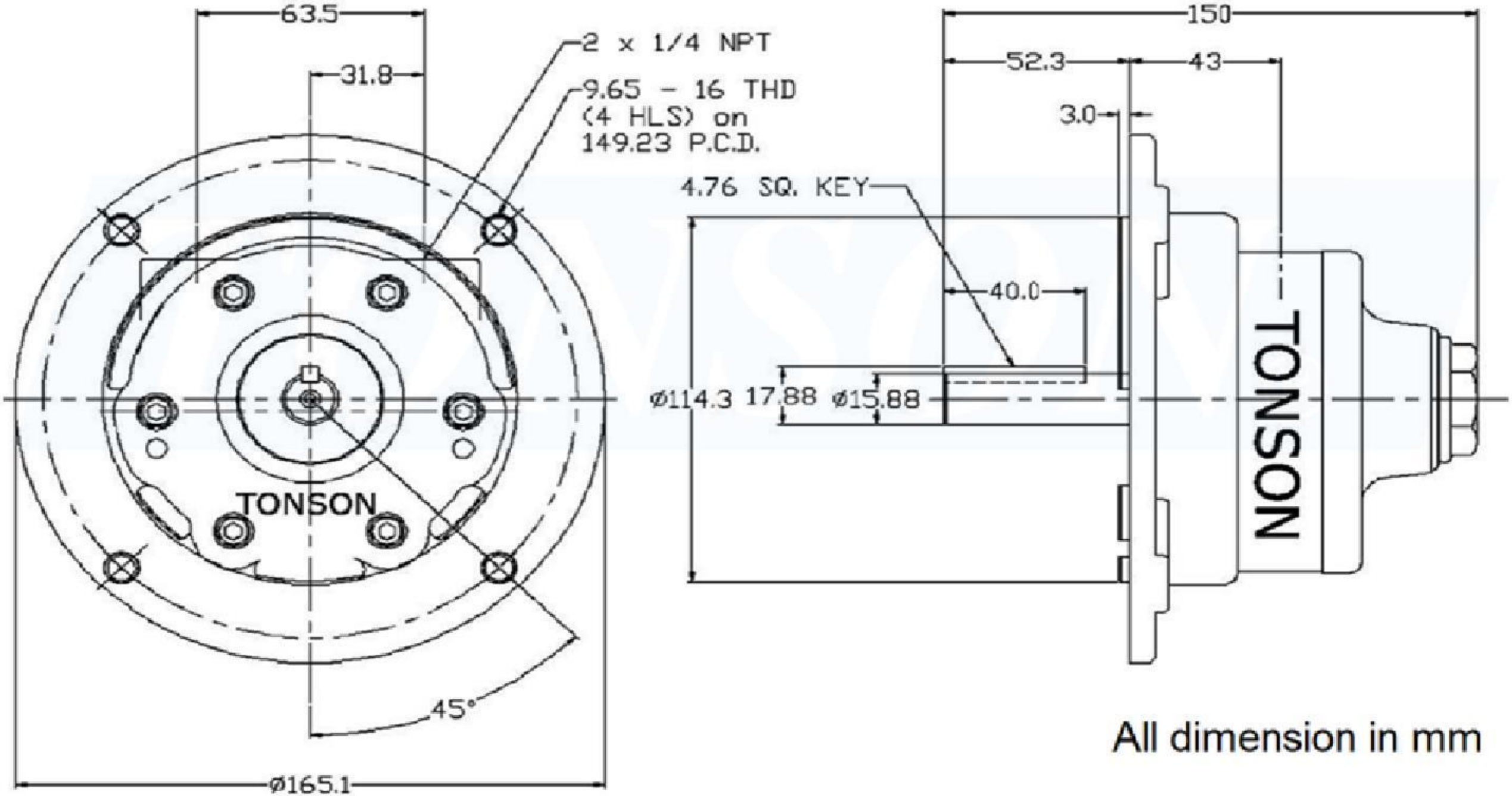

All dimension in mm