V8-N

TONSON VANE AIR MOTOR

NEMA 145TC Flange Mount

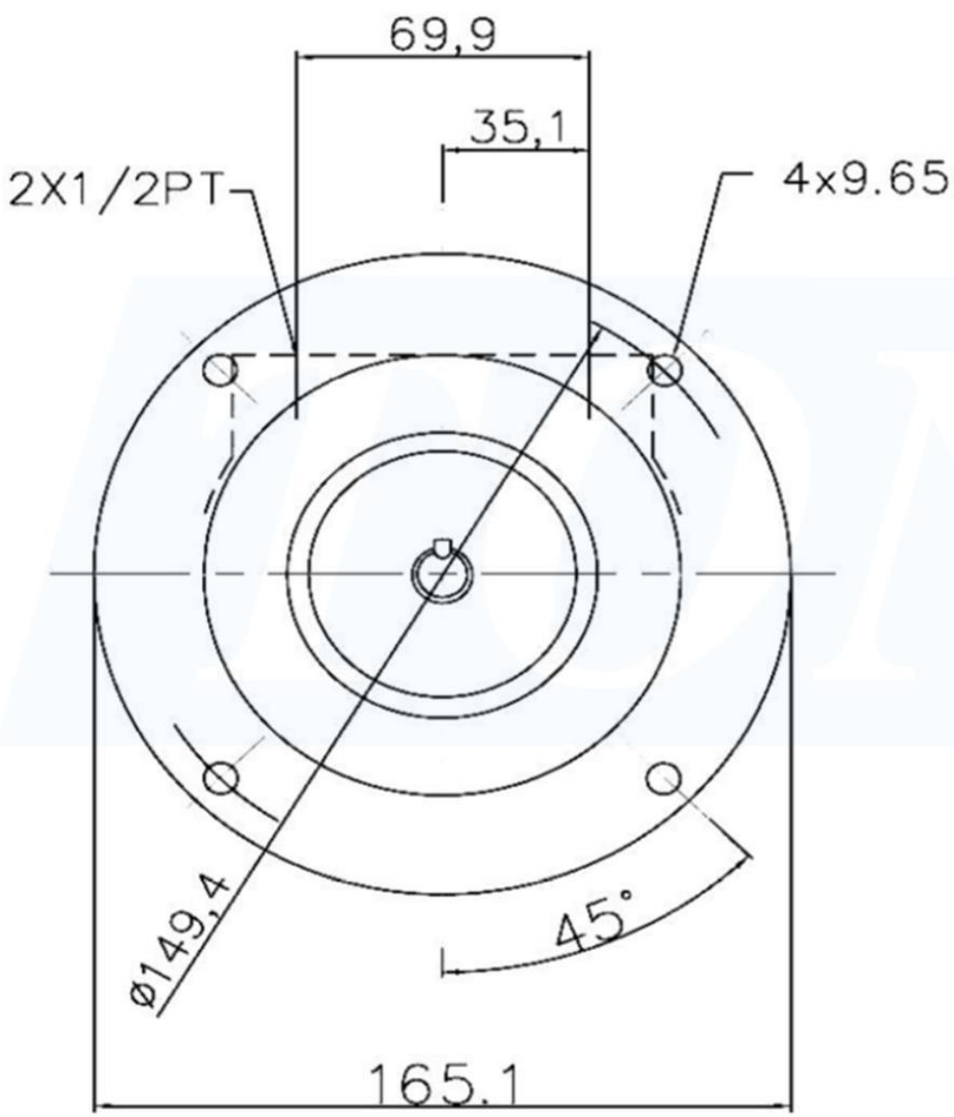

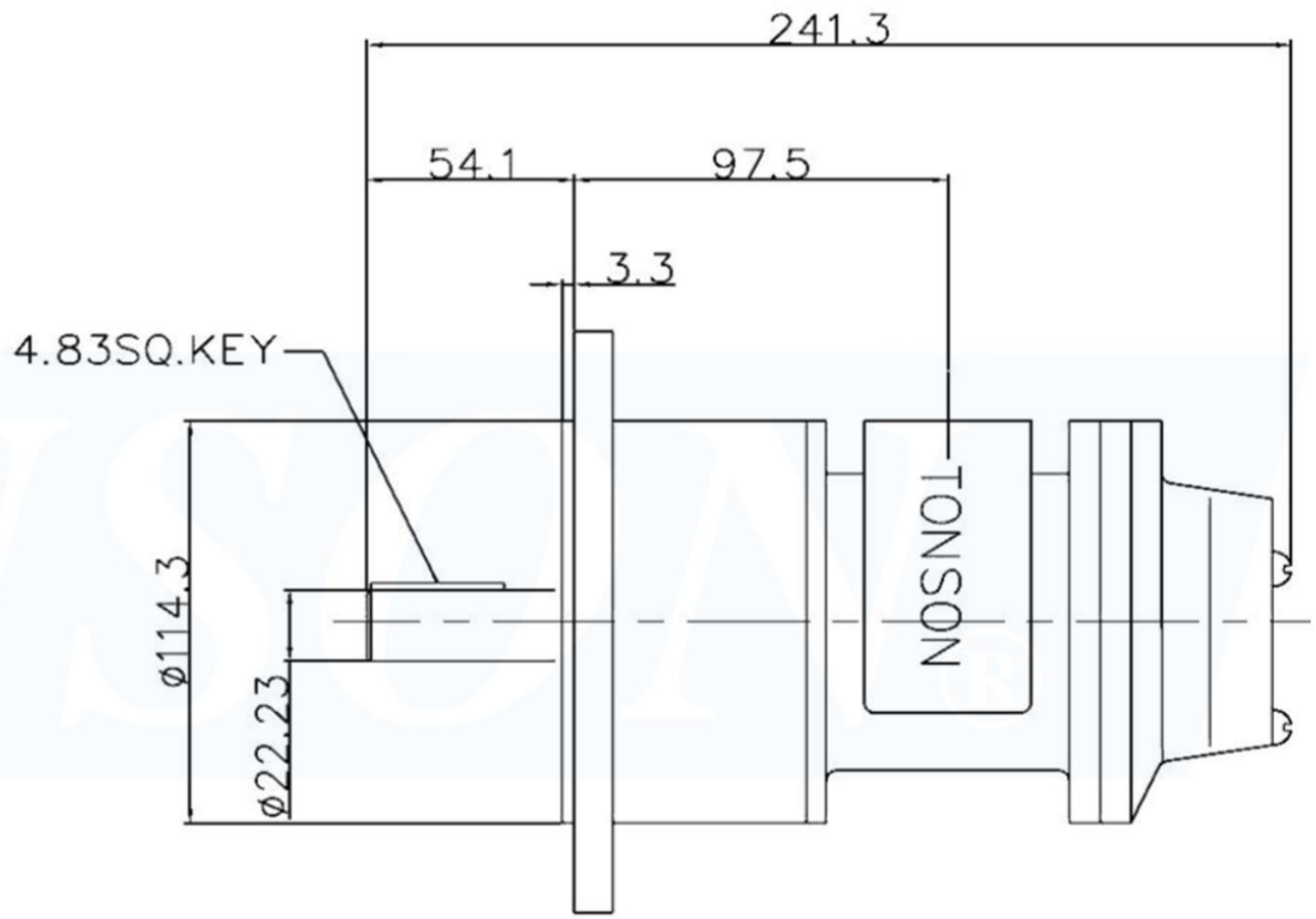

All dimensions in mm